LEDone®

Date: _____ **Location**: _____

Product: _____**Project**: _____

Quantity: _____**Catalog #**: _____

LED MW LOC-RGAL Area Light Series

75W / 100W / 120W / 150W

160W / 200W / 240W / 320W

FEATURES

- Default Wattage:
  - 150W
  - 320W
- IP65 rated
- Full cut off
- Easy installation and maintenance
- Corrosion and rust proof
- 50,000 hours lifetime

SUITABLE APPLICATIONS

- Warehouses
- Stadiums
- Factories
- Parking Lots
- Supermarkets
- Logistic Centers
- Exhibition Halls

Special Order:

- Other CCTs
- Type 2 lens
- Type 4 lens
- Type 5 lens

CONSTRUCTION:

Bronze die-cast aluminum housing treated by anodic oxidation.

OPTICAL SYSTEM:

Lumileds 3030 LED chips. 120° beam angle. Type 3 lens standard.

WARRANTY:

5-year limited warranty. Actual performance may differ as a result of end-user environment and application.

ELECTRICAL:

Available as 120-277V or 277-480V input. 10KV surge protection. -40°C to 40°C, -40°F to 104°F

INSTALLATION & MOUNTING:

Pole Mounting - Extruded Adjustable Arm, Adjustable Slip Fitter, Trunnion or U-Bracket.

CONTROLS & DIMMING:

0-10V dimming comes standard. Motion sensor, photocell and remote-control options available.

120-277V Models							
MODEL NUMBER – 5,000K	WATTAGE	LUMENS	EFFICACY	CRI	POWER FACTOR	THD	REPLACES
LOC-RGAL-MW(75/100/120/150)50KD-T3LV	75W	12,000LM	148.45lm/W	70	0.974	8%	175W – 600W HID
LOC-RGAL-MW(75/100/120/150)50KD-T3LV	100W	14,845LM	148.45lm/W	70	0.974	8%	175W – 600W HID
LOC-RGAL-MW(75/100/120/150)50KD-T3LV	120W	17,814LM	148.45lm/W	70	0.974	8%	175W – 600W HID
LOC-RGAL-MW(75/100/120/150)50KD-T3LV	150W	22,386LM	148.45lm/W	70	0.974	8%	175W – 600W HID
LOC-RGAL-MW(160/200/240/320)50KD-T3LV	160W	25,600LM	144lm/W	70	0.9	20%	600W – 1,000W HID
LOC-RGAL-MW(160/200/240/320)50KD-T3LV	200W	28,800LM	144lm/W	70	0.9	20%	600W – 1,000W HID
LOC-RGAL-MW(160/200/240/320)50KD-T3LV	240W	34,560LM	144lm/W	70	0.9	20%	600W – 1,000W HID
LOC-RGAL-MW(160/200/240/320)50KD-T3LV	320W	46,000LM	144lm/W	70	0.9	20%	600W – 1,000W HID

DLC Product ID:

- LOC-RGAL-MW(75/100/120/150)50KD-T3LV - P6Z40T5F
- LOC-RGAL-MW(160/200/240/320)50KD-T3LV - PT2FSPUV

LED MW LOC-RGAL Area Light Series

LEDone®

277-480V Models							
MODEL NUMBER – 5,000K	WATTAGE	LUMENS	EFFICACY	CRI	POWER FACTOR	THD	REPLACES
LOC-RGAL-MW(75/100/120/150)50KD-T3HV	75W	12,000LM	148.45lm/W	70	0.974	8%	175W – 600W HID
LOC-RGAL-MW(75/100/120/150)50KD-T3HV	100W	14,845LM	148.45lm/W	70	0.974	8%	175W – 600W HID
LOC-RGAL-MW(75/100/120/150)50KD-T3HV	120W	17,814LM	148.45lm/W	70	0.974	8%	175W – 600W HID
LOC-RGAL-MW(75/100/120/150)50KD-T3HV	150W	22,386LM	148.45lm/W	70	0.974	8%	175W – 600W HID
LOC-RGAL-MW(160/200/240/320)50KD-T3HV	160W	25,600LM	144lm/W	70	0.9	20%	600W – 1,000W HID
LOC-RGAL-MW(160/200/240/320)50KD-T3HV	200W	28,800LM	144lm/W	70	0.9	20%	600W – 1,000W HID
LOC-RGAL-MW(160/200/240/320)50KD-T3HV	240W	34,560LM	144lm/W	70	0.9	20%	600W – 1,000W HID
LOC-RGAL-MW(160/200/240/320)50KD-T3HV	320W	46,000LM	144lm/W	70	0.9	20%	600W – 1,000W HID

DLC Product ID:

- LOC-RGAL-MW(75/100/120/150)50KD-T3HV -
- LOC-RGAL-MW(160/200/240/320)50KD-T3HV -

Series	Wattage	Wattage	Color Temperature	Dimming	Lens Type	Voltage
LOC-RGAL-MW	75W 100W 120W 150W	160W 200W 240W 320W	5000K	D = 0-10V dimming	T3 = Type 3	LV = 120-277V HV = 277-480V

MEASUREMENTS

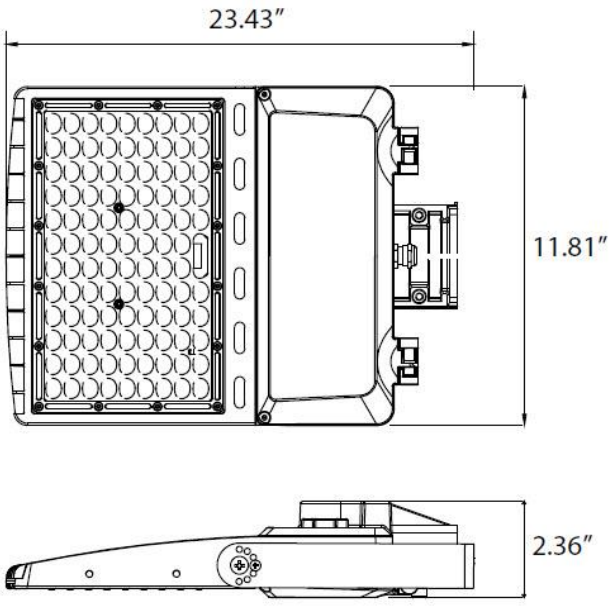

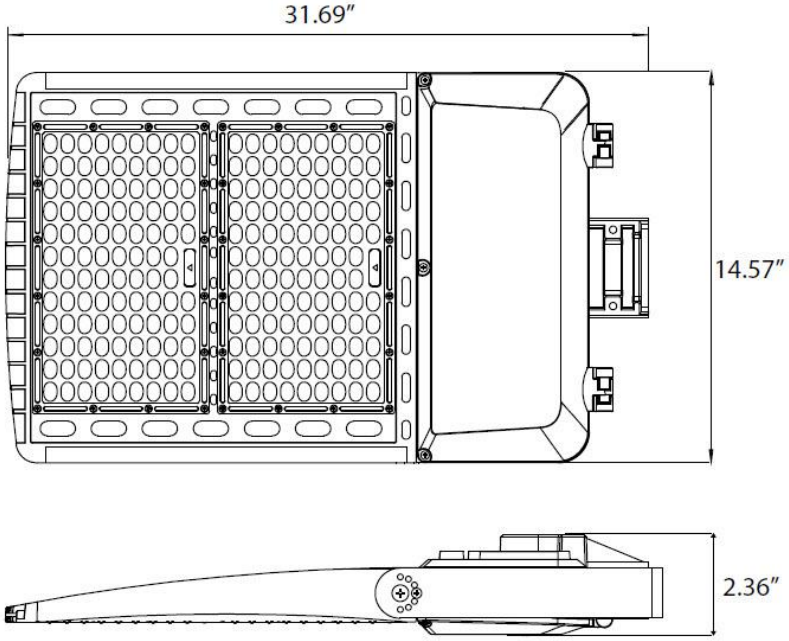

75W / 100W / 120W / 150W

160W / 200W / 240W / 320W

MODEL	QUANTITY	WEIGHT	UPC CODE
LOC-RGAL-MW(75/100/120/150)50KD-T3LV	1	8.25lbs	00810050941327
LOC-RGAL-MW(160/200/240/320)50KD-T3LV	1	15.25lbs	00810050941723
LOC-RGAL-MW(75/100/120/150)50KD-T3HV	1	8.25lbs	00810050942782
LOC-RGAL-MW(160/200/240/320)50KD-T3HV	1	15.25lbs	00810050942775

ADJUSTABLE

Must use wide cross head to open!

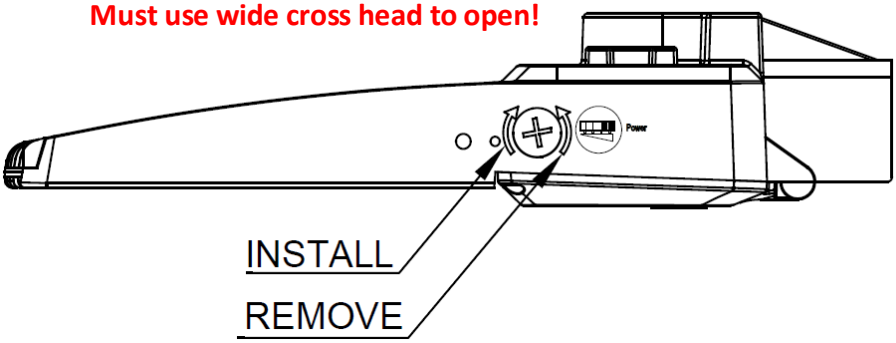

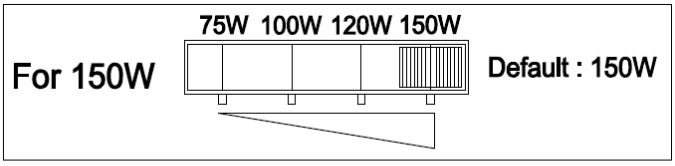

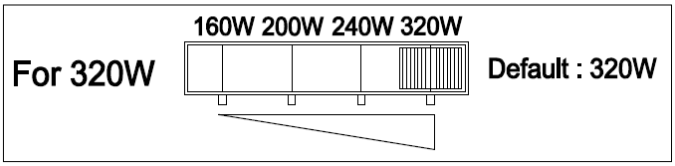

PHOTOMETRIC DATA

LEDone®

75W

EPA: 0.96

BUG Rating: B3-U2-G2

Length	Width	Square Feet	Adjustable Coefficient
16.50”	12.00”	1.38	0.70

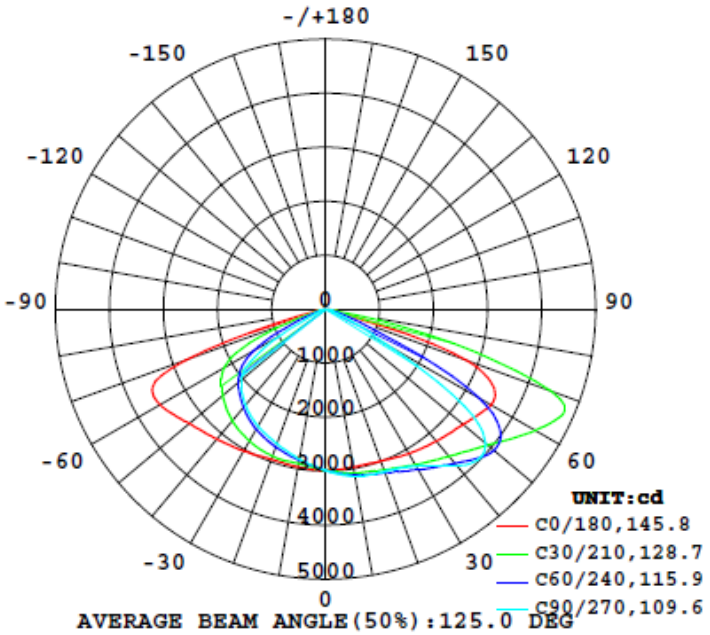

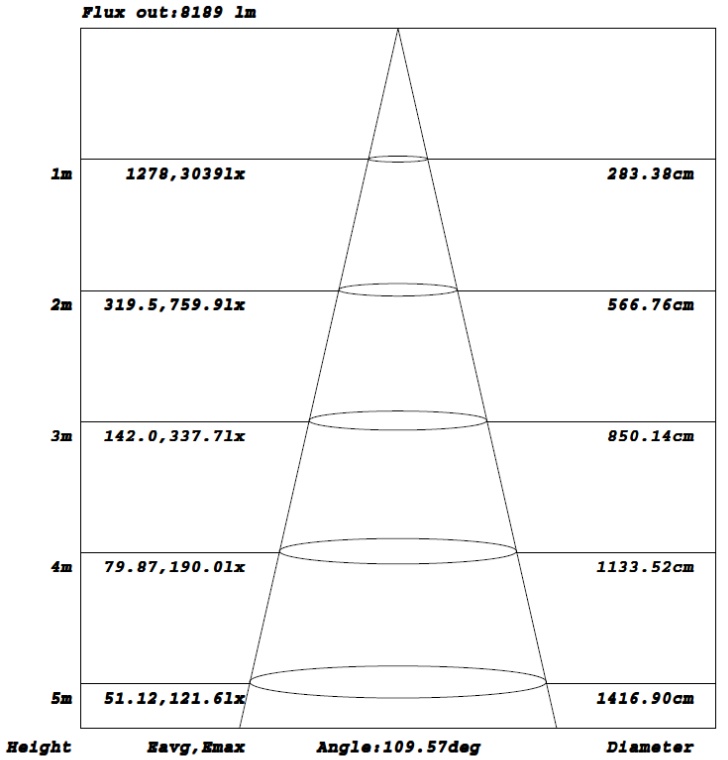

Note:The Curves indicate the illuminated area and the average illumination when the luminaire is at different distance.

100W

EPA: 0.96

BUG Rating: B3-U2-G3

Length	Width	Square Feet	Adjustable Coefficient
16.50”	12.00”	1.38	0.70

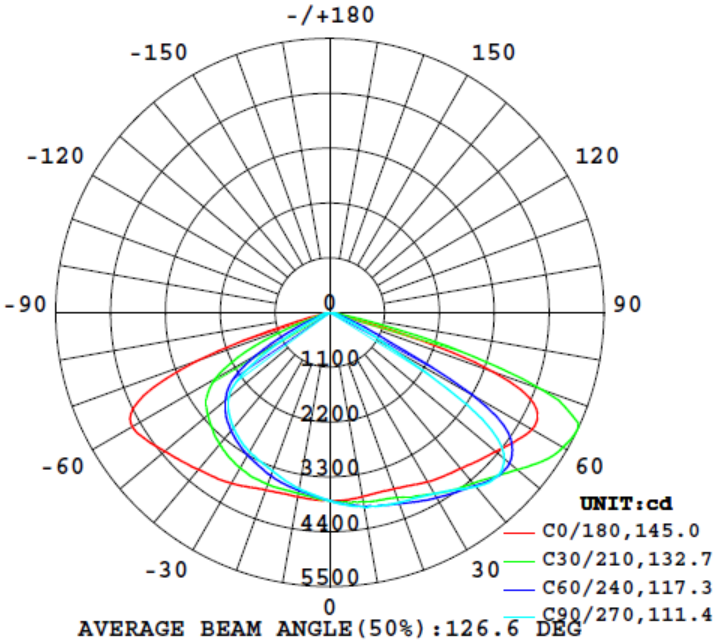

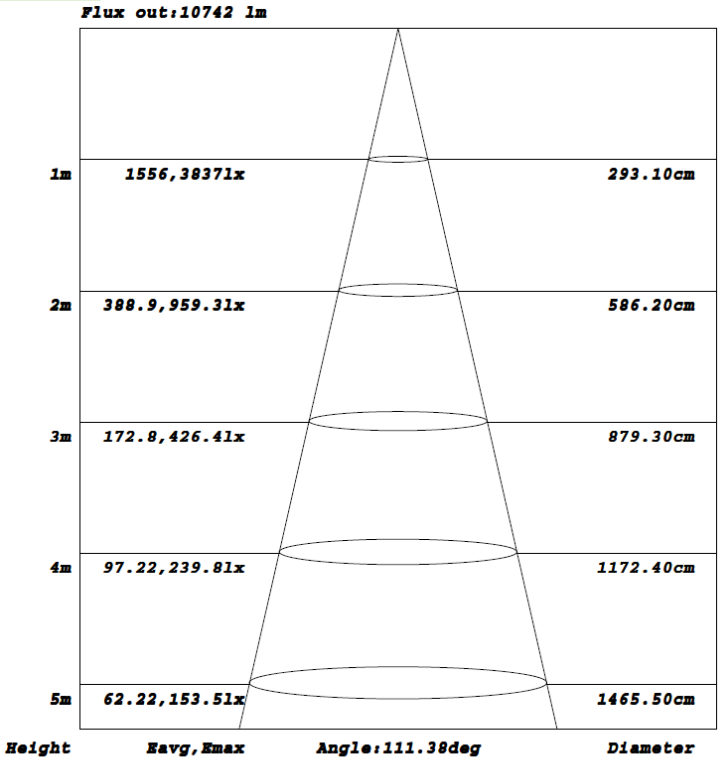

Note:The Curves indicate the illuminated area and the average illumination when the luminaire is at different distance.

PHOTOMETRIC DATA

LEDone®

120W

EPA: 0.96

BUG Rating: B3-U2-G3

Length	Width	Square Feet	Adjustable Coefficient
16.50”	12.00”	1.38	0.70

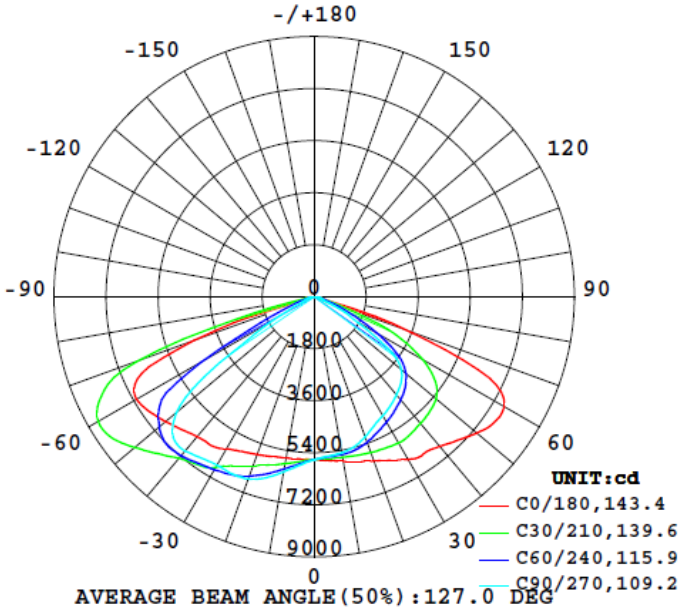

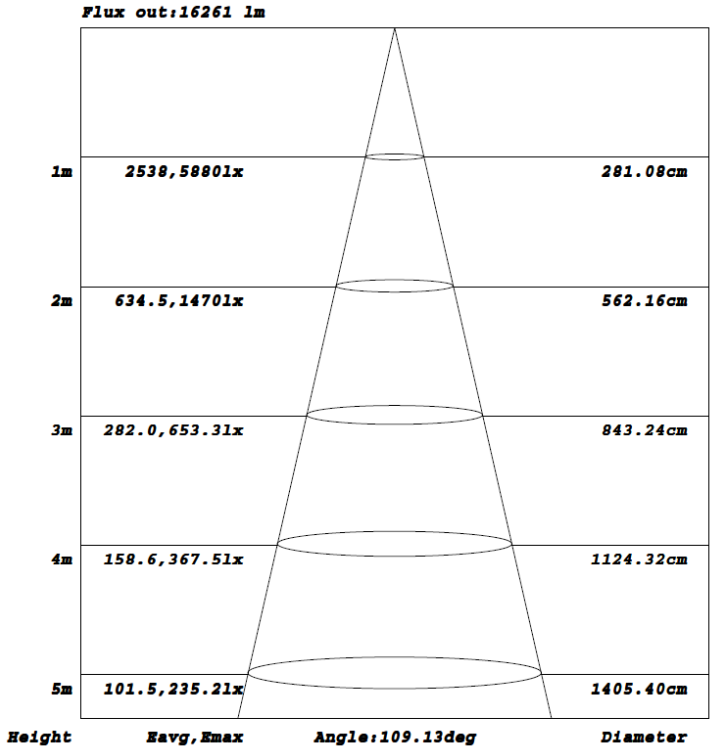

Note:The Curves indicate the illuminated area and the average illumination when the luminaire is at different distance.

150W

EPA: 0.96

BUG Rating: B4-U1-G3

Length	Width	Square Feet	Adjustable Coefficient
16.50”	12.00”	1.38	0.70

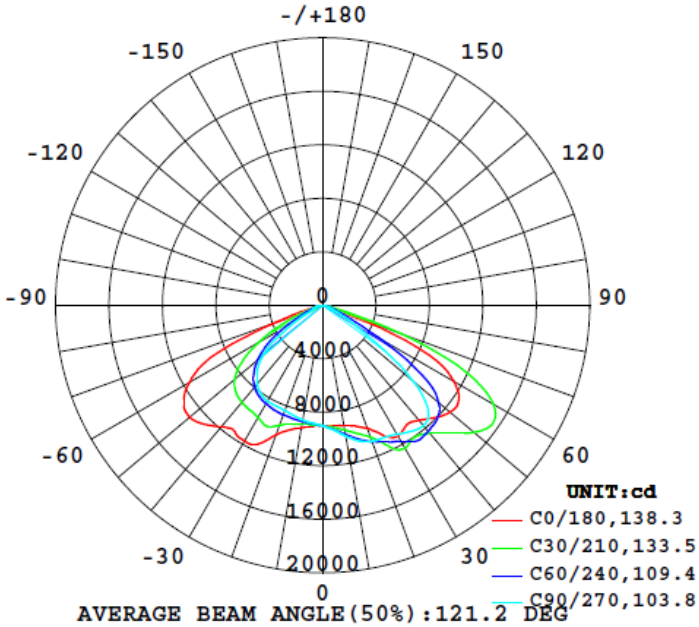

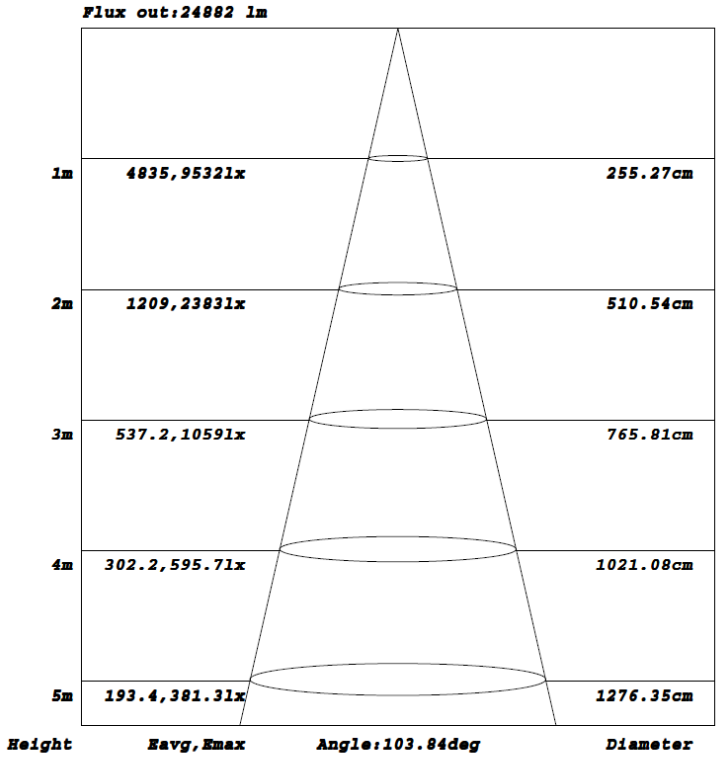

Note:The Curves indicate the illuminated area and the average illumination when the luminaire is at different distance.

PHOTOMETRIC DATA

LEDone®

160W

EPA: 1.96

BUG Rating: B5-U3-G3

Length	Width	Square Feet	Adjustable Coefficient
24.80”	15.20”	2.62	0.75

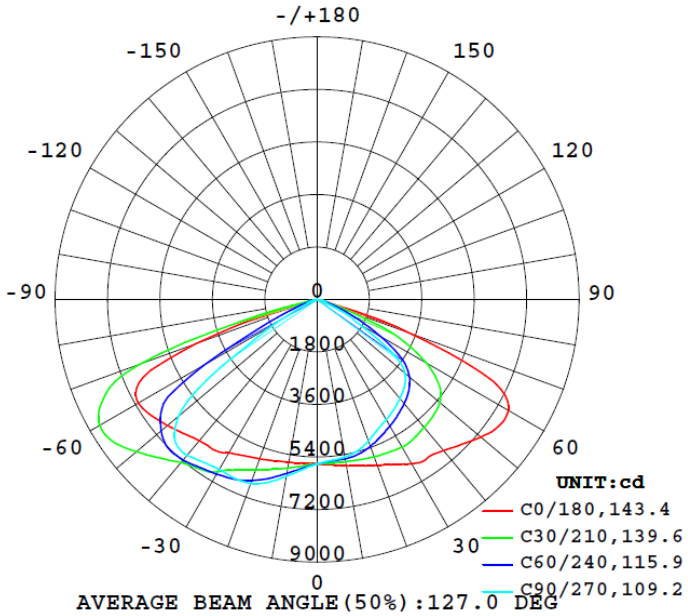

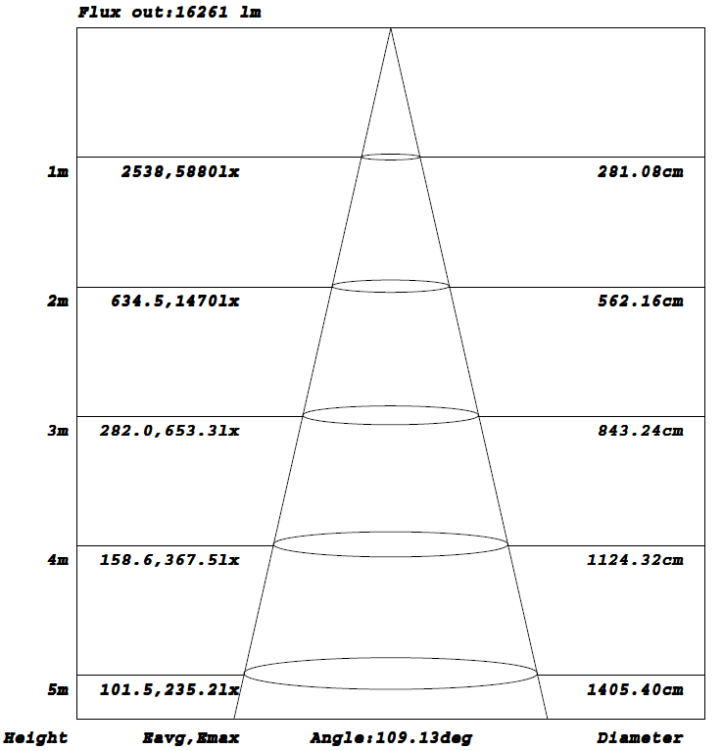

Note:The Curves indicate the illuminated area and the average illumination when the luminaire is at different distance.

200W

EPA: 1.96

BUG Rating: B5-U3-G3

Length	Width	Square Feet	Adjustable Coefficient
24.80”	15.20”	2.62	0.75

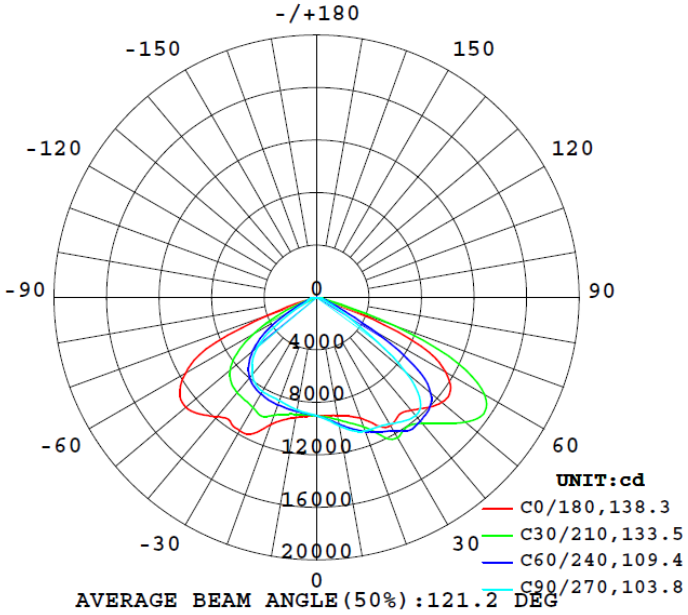

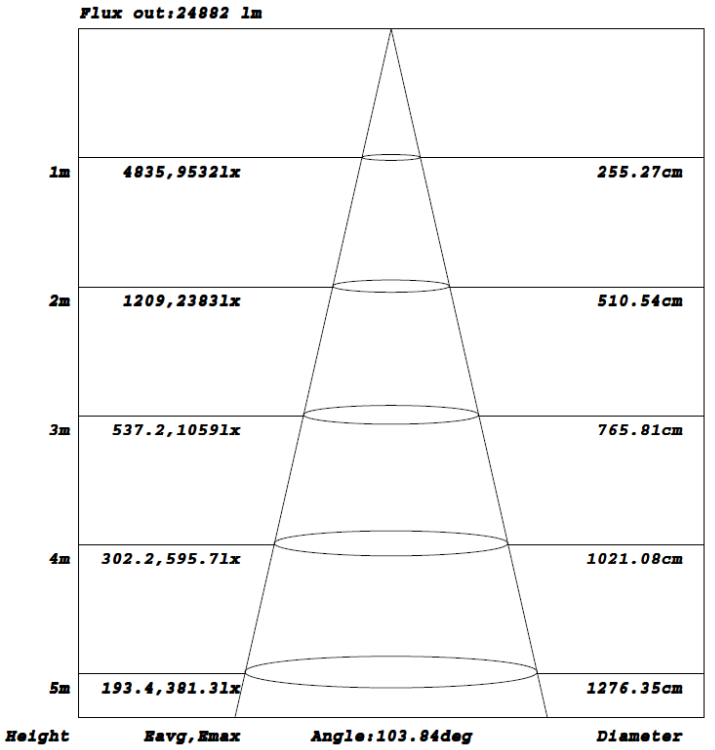

Note:The Curves indicate the illuminated area and the average illumination when the luminaire is at different distance.

PHOTOMETRIC DATA

LEDone®

240W

EPA: 1.96

BUG Rating: B5-U3-G4

Length	Width	Square Feet	Adjustable Coefficient
24.80”	15.20”	2.62	0.75

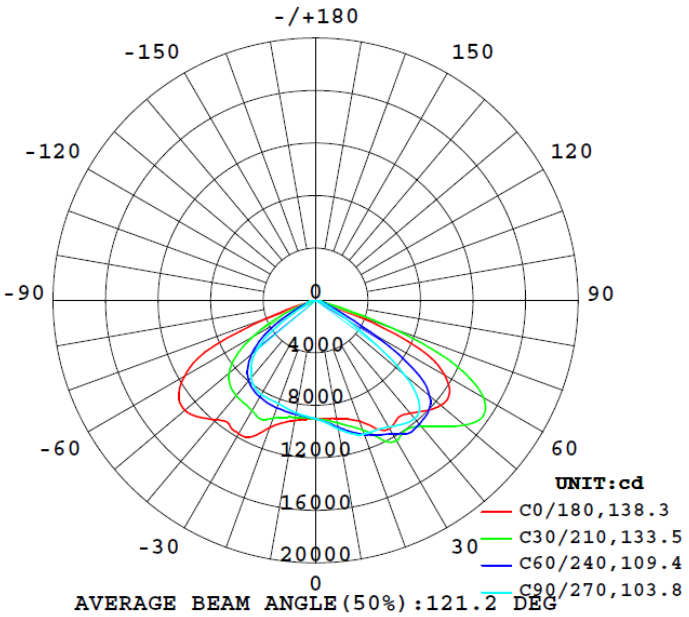

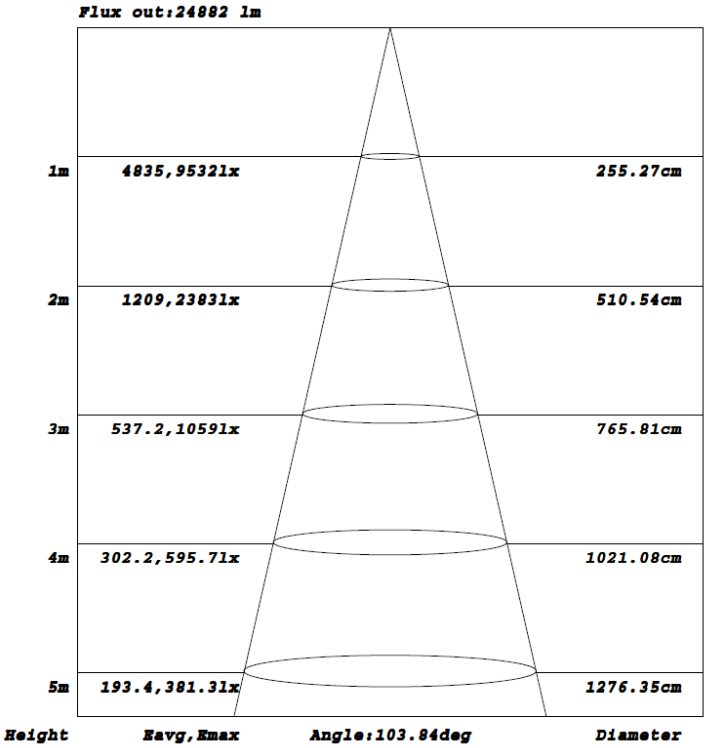

Note:The Curves indicate the illuminated area and the average illumination when the luminaire is at different distance.

320W

EPA: 1.96

BUG Rating: B5-U3-G4

Length	Width	Square Feet	Adjustable Coefficient
24.80”	15.20”	2.62	0.75

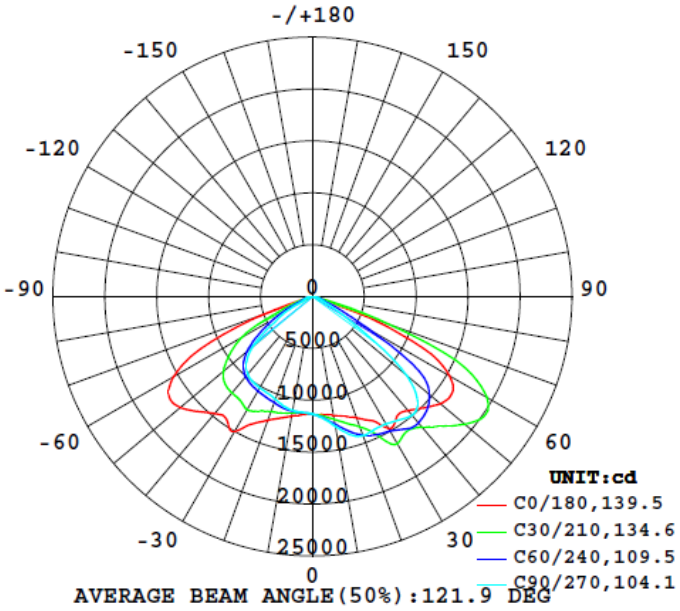

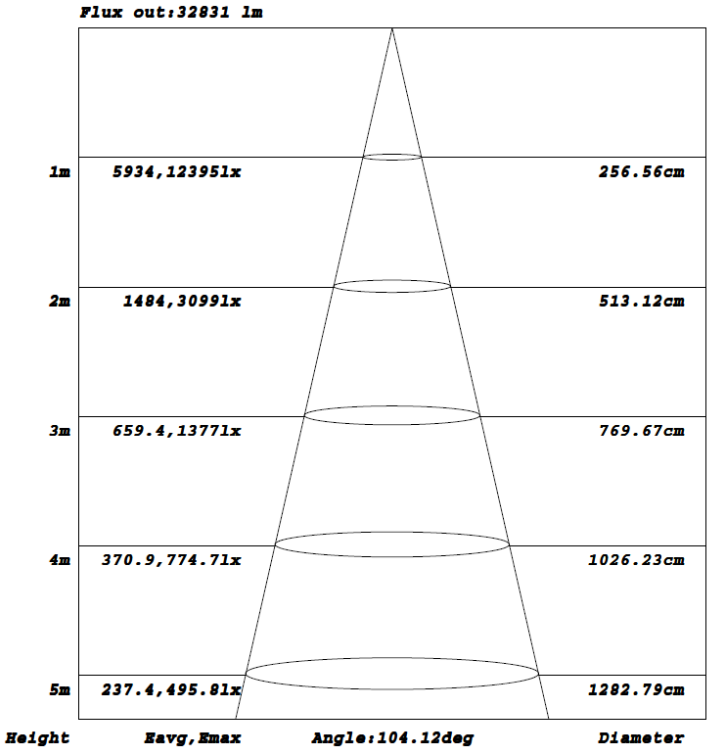

Note:The Curves indicate the illuminated area and the average illumination when the luminaire is at different distance.

MOUNTING OPTIONS

LEDone®

Adjustable Arm

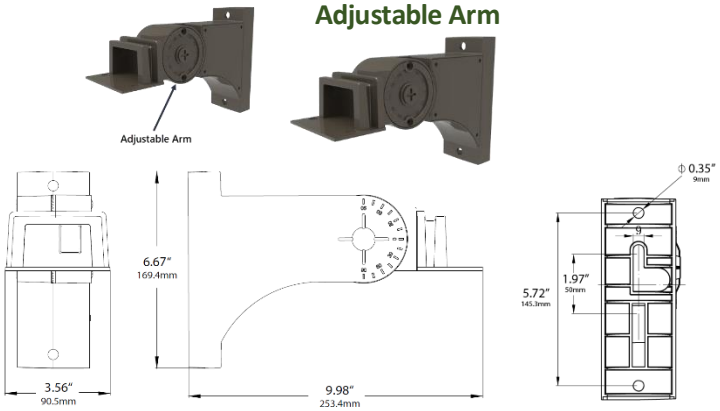

Adjustable Slip Fitter

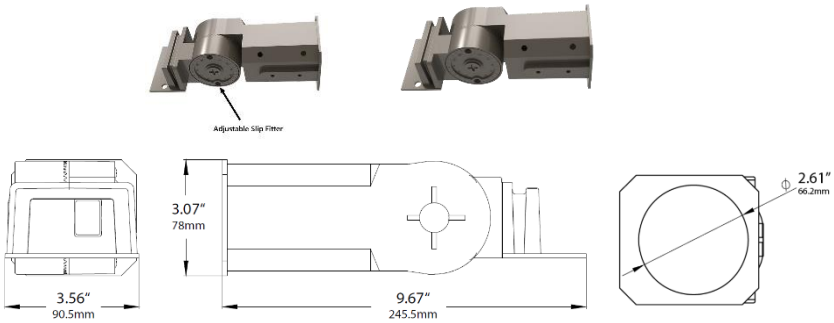

Trunnion

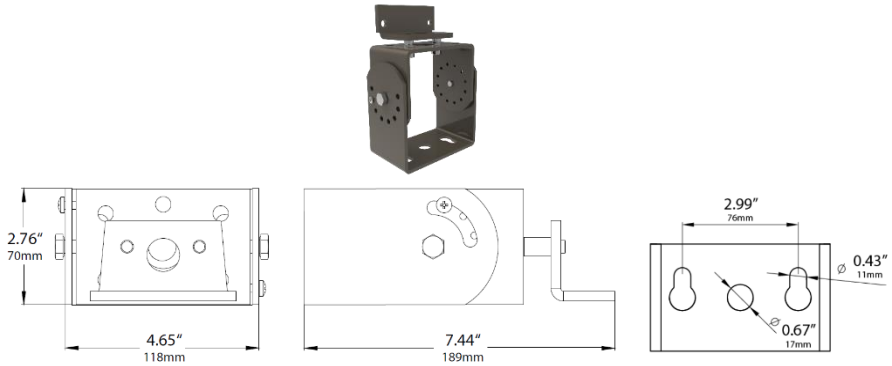

150W and below U-Bracket

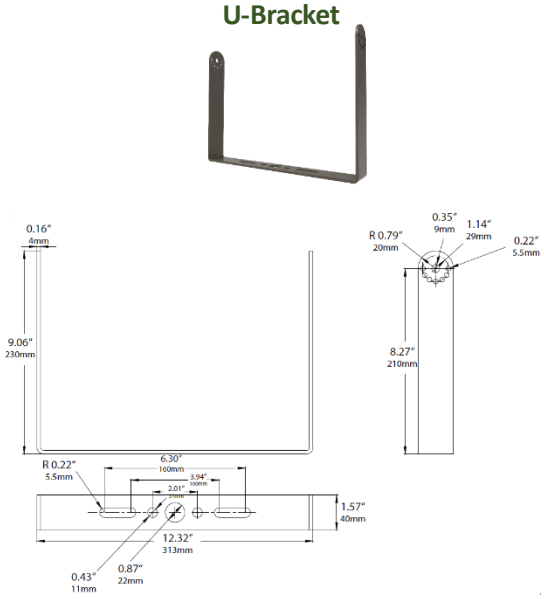

240W – 320W U-Bracket

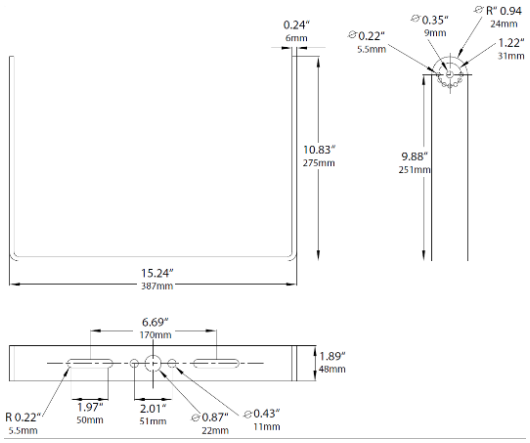

OPTIONAL ACCESSORIES

Motion Sensor
LOC-ANT-5-4T
(Compatible with remote control

Remote Control
LOC-RC-100

Photocell (Daylight Sensor)
LOC-SK-101-4T
(Not compatible with remote control)